EarthMinded™

Do-it-Yourself Rain Barrel Diverter and Parts Kit
User Guide RBK-0001 V.1

EarthMinded has assembled all the parts needed to make a rain barrel using a recycled barrel or plastic trash barrel (barrel not included). Using this kit, anyone who can use a drill can make and install a rain barrel in minutes!

Please read all instructions and warnings before installation, and retain this Booklet for future reference

Las instrucciones en español se pueden bajar en www.earthminded.com/espanol

1 General description

Rain barrels have been used for hundreds of years to harvest and store rainwater for use with plants, gardens and other outdoor chores.

EarthMinded's DIY Rain Barrel Kit is a state-of-the art sealed rainwater collection system when used with a barrel or container you supply. Our patented FlexiFit™ diverter installs easily by drilling a single hole into any standard 2" x 3" or 3" x 4" rectangular downspout. The diverter sends rainwater into the barrel. Once the barrel is full, the diverter will automatically pass excess water through the downspout.

The FlexiFit™ diverter helps prevent mosquitoes, pests and algae-causing sunlight from entering the barrel. The diverter is easy to remove from the downspout and the kit includes a winterizing hole cover.

The FlexiFit™ diverter offers many advantages over conventional top fill rain barrels that commonly flood with heavy rain, require permanent modifications to your downspout, and use unsightly overflow hoses.

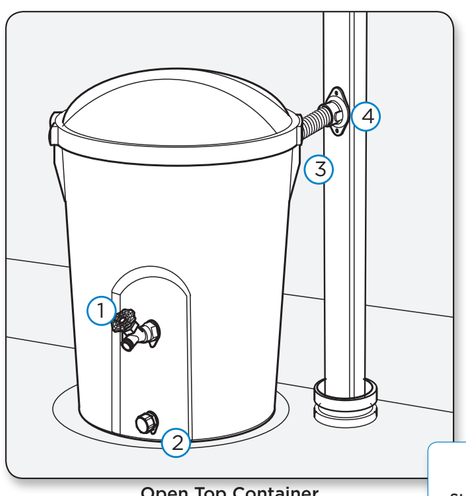

Open Top Container

1. Spigot
2. Drain or hose attachment
3. Fill hose
4. FlexiFit™ Diverter
5. Winter hole cover

Some areas prohibit the use of rain barrels. Please check local regulations before installing.

WARNING
Stored rainwater not for human or animal consumption

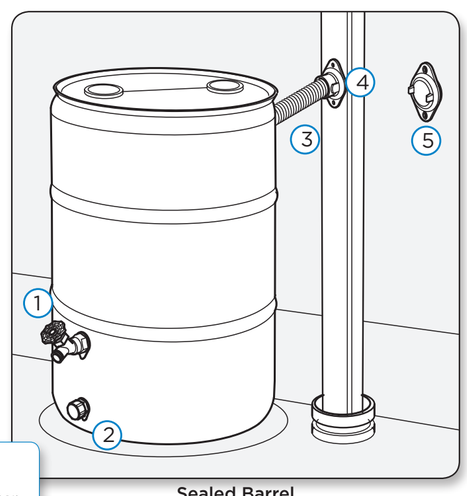

Sealed Barrel

2 Parts list

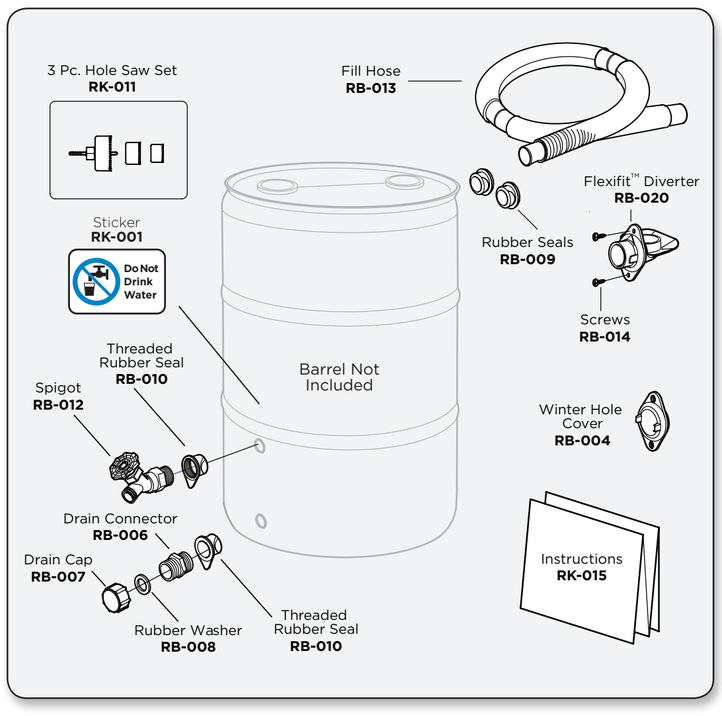

Tools needed

1. Safety Glasses
2. Safety Gloves
3. Drill
4. Measuring Tape or Ruler
5. Pencil
6. Scissors
7. Phillips Screwdriver
8. Level

3 Selecting a container

EarthMinded supplies only the parts and fittings to be added to a barrel you supply. Therefore, we take no responsibility for losses, damages or injury caused by failure of the barrel, or improper installation of the parts. Follow these instructions carefully for successful results.

This Kit will work on both sealed barrels and open top barrels with lids. Open top barrels are easier to clean, and provide quick access to the water using a bucket or watering can, but present a safety concern for children; the lid must always be latched and locked if possible.

Water weighs 8.3 lbs. per gallon. Be sure to select a sturdy container that can support the weight when full. 55 gallons weighs 456 lbs.

Select a sturdy watertight container:

a. A heavy duty or commercial grade plastic waste barrel with latching lid.
b. A traditional wood barrel can make an attractive and natural looking rain barrel. Make sure it is in good condition, clean and watertight.
c. If using a recycled barrel, use only FDA approved food grade barrels. Make sure the barrel is clean and has not been used to contain toxic or hazardous substances.

The container selected should be sealed, or have a latching lid to prevent mosquitoes, animals and children from entering the barrel.

**This kit is not recommended for use with metal drums or barrels.

WARNING
Stored rainwater is not suitable for human or animal consumption

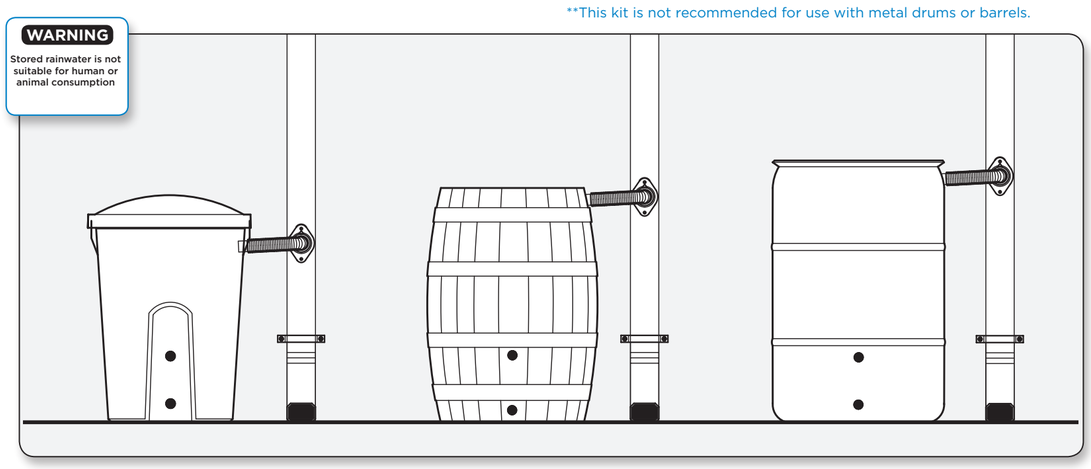

Plastic Waste Barrel (Open Top) | Wood Barrel | Recycled Plastic Barrel (Sealed)

4 Select a location for your rainbarrel

Before assembling the parts to the barrel we recommend that you select and prepare the location where the barrel will be used. This will help you locate the fittings on the barrel in the most convenient location.

- Choose a downspout that is near the plants or beds to be watered.
- The downspout must be a 2" x 3" or 3" x 4" rectangular type
- The barrel must be located within 3 feet of the downspout to se the fill hose provided
- The ground under the barrel must be level and firm. A solid surface base of wood, pavers or stone is recommended.
- If the surface is not level, use a shovel or rake to grade the surface. Check by placing a level on the rim of the barrel before continuing.

Place the barrel in the intended location with the front facing out.

1. Mark the front of the barrel. This will be the side with the spigot facing out. The spigot should be located on a flat or evenly curved surface without ridges or features that can affect the water seal.

2. Hold the fill hose in position between the barrel and the downspout and mark the water inlet location on the rim of the barrel. This mark can be at the back, right or left side of the barrel.

Check that the hose can reach horizontally from the rim of the barrel to the downspout.

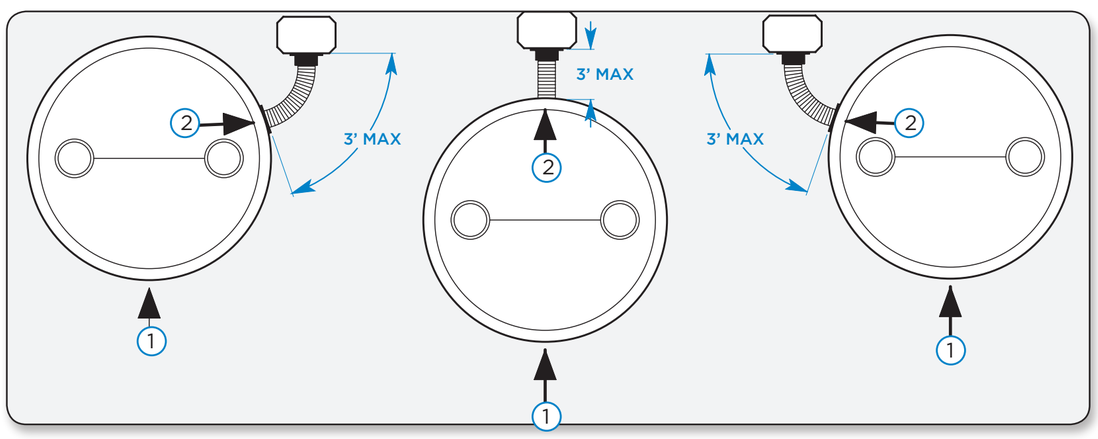

Top View

5 Installing the front fitting on the barrel

1-1/4" (32 mm) Hole Saw

There are 2 options for installing the front fittings. Option A has a single spigot st the bottom of the barrel and is recommended if you will only be using a garden hose to access the water in the barrel. This configuration gives access to all the water in the barrel. A stand is recommended to incread water pressure. **Option B** has a mid-height spigot and a bottom drain and is recommended for use with a watering can.

Option A: Bottom spigot only

1. Find the front of the barrel; measure up 2.5" (65mm) from the bottom of the barrel and mark the center for the spigot hole. Drill a hole using the (SMALL) 1-1/4" hole saw included in the set.
2. Insert the threaded rubber seal into the hole. Pinch the seal into a "U" shape for easier insertion.
3. Thread the spigot into the seal until the hex collar on the spigot sits firmly against the seal and the water outlet points down. Soapy water or hand lotion on the threads will reduce friction and imptove fit.

Option B: Mid-height spigot with bottom drain

1. Mark the spigot hole. Find the front of the barrel, measure up 12" (35mm) from the bottom of the barrel and mark the center for the mid-height spigot hole.
2. Mark the drain hole. Measure up 2.5" (65mm) from the bottom of the barrel and mark the center for the drain hole. If you plan on connecting a garden or soaker hose to the drain fitting, we recommend that the drain be located 6" (15mm) off center, to the left or right side of the spigot to give clearance for filling the watering can.
3. Drill (2) holes on these marks using the (SMALL) 1-1/4" hole saw included in the set. You may need to remove the slug of plastic from the end of the hole saw after drilling the first hole.
4. Insert (2) threaded rubber seals into both the spigot and drain holes. Pinch the seal into a "U" shape for easier insertion.
5. Thread the spigot and drain into the seal until the hex collar sits firmly against the seal. Soapy water or hand lotion will reduce friction and improve fit.

TIP
Pinch the threaded rubber seal into a "C" shape before inserting into the hole in the barrel.

TIP
Soapy water or hand lotion on the hose cuff and rubber seal reduces friction and makes insertion easier.

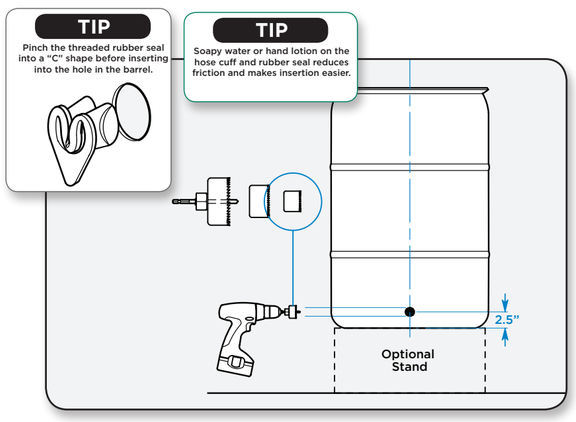

Option A

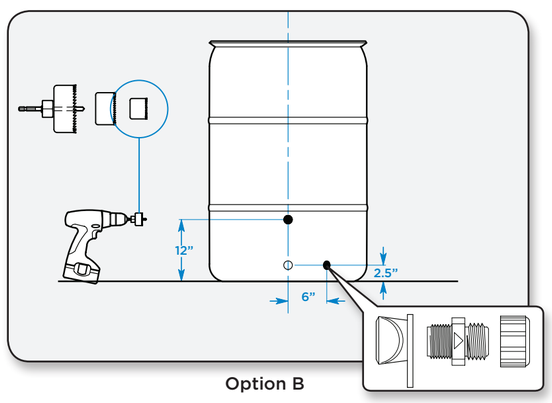

Option B

6 Installing the water inlet fitting

1-1/2" (38 mm) Hole Saw

1. Locate the water inlet mark on the rim of the barrel (from Step 4). Measure down 3" (75mm) and mark the center for the water inlet hole. Make sure the inlet is located on a flat or evenly curved surface: avoid ridges or other features that could affect the water seal.
2. Drill a hole using the (MEDIUM) 1-1/2" hole saw included in the set.
3. Insert the threaded rubber seal into the hole. Pinch the seal into a "U" shape for easier insertion.

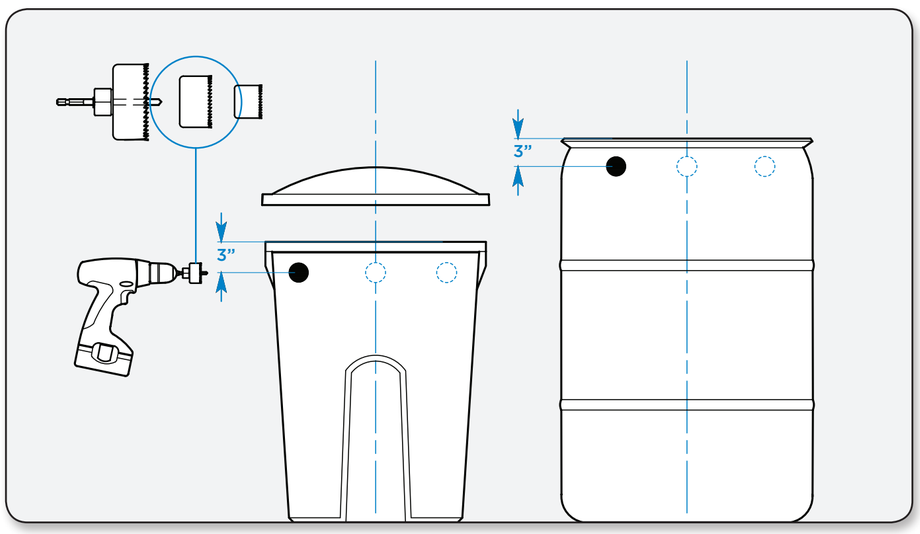

Back of barrel

7 About the FlexiFit™ diverter

DO NOT CUT THE DOWNSPOUT UNTIL READING STEPS 8 AND 9!

The Flexifit™ diverter redirects water from your downspout to the barrel, and automatically passes water through the downspout when the barrel is full of rainwater.

The diverter is installed in a hole that is cut in the downspout.

1. The hole must be cut at the correct height for the diverter to work properly.
2. If the hole is cut too low, the barrel will not fill properly.
3. If the hole is cut too high, water will overflow from the barrel rim (this only applies to open top barrels).

IMPORTANT: There are two ways to install the diverter depending on the type of barrel you use. If the barrel is a sealed container without a lid, the diverter can be located at the same level as the rim of the barrel or higher. This will improve the filling efficiency of the diverter.

If the barrel has an opening lid, the center of the diverter hole must be drilled 2.5" (65mm) below the level of the rim of the barrel to prevent water from leaking from the lid seam. The diverter will not work if it is placed below the level of the water inlet on the barrel.

Not for use with round downspouts.

WARNING
Damage to home or property may occur if improperly installed.

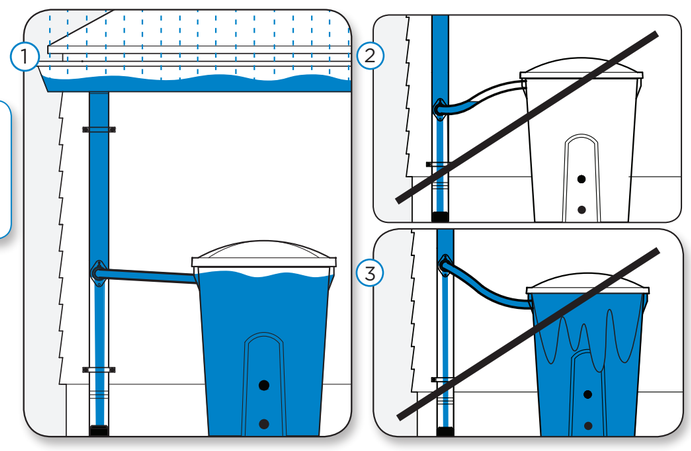

CORRECT

INCORRECT
If the hole is cut too low, the barrel will not fill.

INCORRECT
For open top containers only, If the hole is cut too high, water will overflow from the barrel rim.

8 Marking the FlexiFit™ diverter hole on downspout

DO NOT CUT THE DOWNSPOUT UNTIL READING STEP 9!

1. Mark a reference line even with the barrel rim on the downspout using a pencil and a straight edge placed on the rim of the barrel as a guide.
2. For sealed containers (no opening lid) measure and mark the CENTER line of the downspout.
3. For open top containers only: measure 2.5 inches (65mm) below the reference line and make a second mark at the CENTER of the downspout.

Be sure to take an elevated base into account before measuring. If you plan on using an elevated base you must do it before measuring and cutting the downspout.

An elevated base made from wood or brick will increase water pressure if using with a garden hose

When installing to a 3" x 4" rectangular downspout, make the mark on the narrow 3" side. Be sure to drill the hole on this narrow side of the downspout (not the front) for the diverter to work properly.

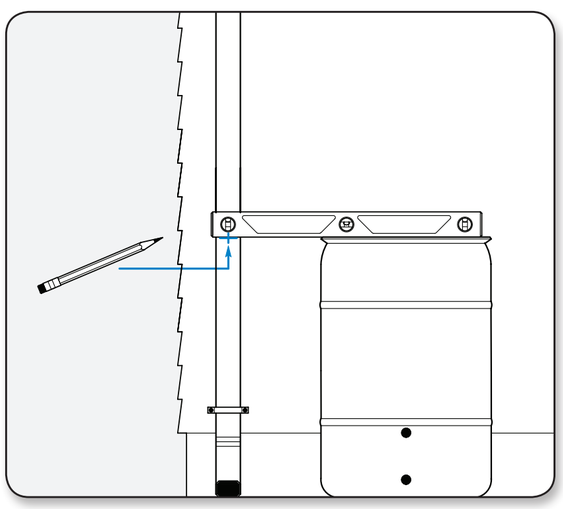

Sealed Barrel

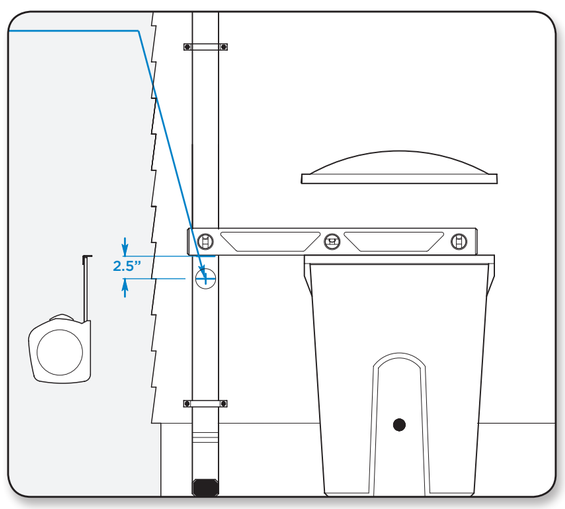

Open Top Container

9 Drilling the FlexiFit™ diverter hole

Drill a hole in the downspout using the (LARGE) 2 1/8" hole saw. The center bit of the hole saw should align with the center mark on the downspout.

a. Do not force the hole saw. Cut slow and steady keeping a firm hold on the drill.
b. Always use safety glasses and gloves when cutting or drilling
c. The cut edges of the downspout can be sharp. Wear protective safety glasses and gloves when handling.
d. For 3" x 4" downspouts make sure you drill the hole on the narrow 3" side.

WARNING – Installation Hazard
WARNING – Wear Safety Glasses
WARNING – Electrocution Hazard
WARNING – Wear Safety Gloves

2-1/8" (54 mm) Hole Saw

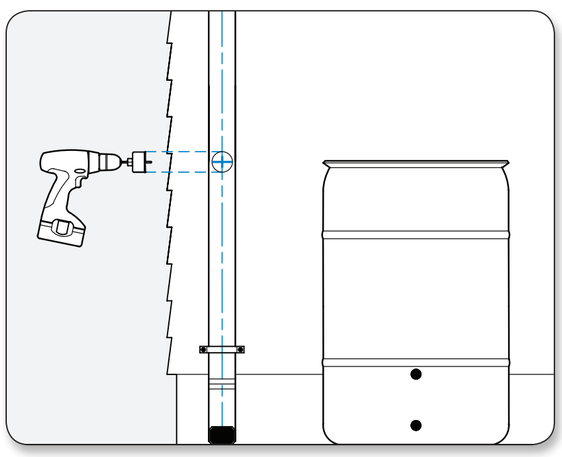

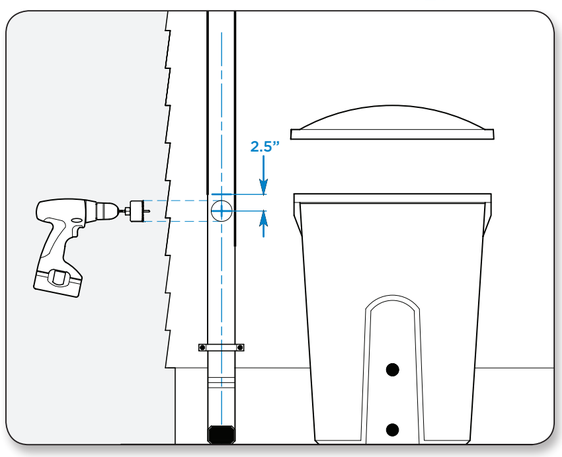

10 Installing the FlexiFit™ diverter

1. Insert the diverter into the hole in the downspout by squeezing the sides and pushing the diverter into the downspout until the flange sist flat against the downspout. Do not twist the diverter when installing - push it straight in - with the cup facing up at all times to insure a proper seal. Make sure that the arrow on the front of the diverter is installed pointing straight up.
2. Use (2) of the self-tapping screws to attach the diverter to the downspout.
3. Connect the fill hose to the cuff end of the FlexiFit diverter. Press the hose into the diverter until the corrugated section is flush against the diverter. Use soapy water or hand lotion on the hose cuff and seal to reduce friction and improve fit.

WARNING – Installation Hazard
WARNING – Wear Safety Glasses
WARNING – Electrocution Hazard
WARNING – Wear Safety Gloves

TIP: Soapy water or hand lotion on the hose cuff and rubber seal reduces friction and makes insertion easier.

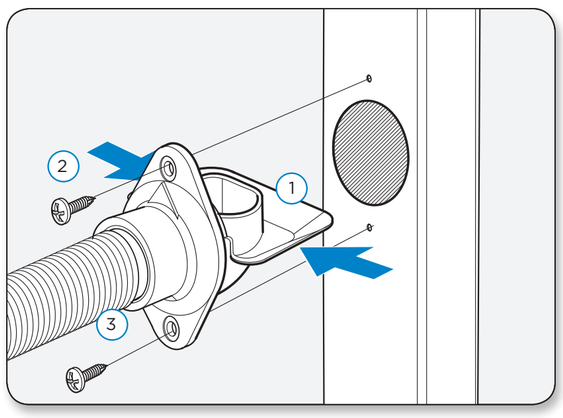

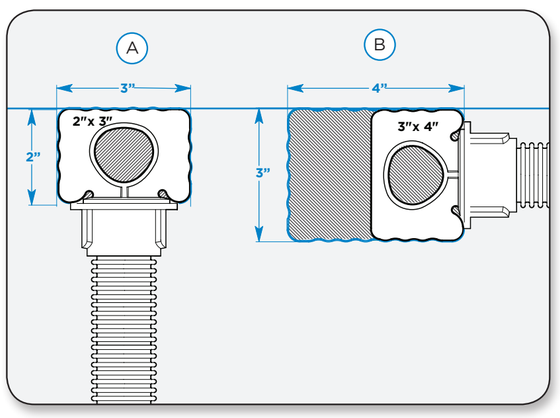

11 Connecting the barrel

1. Connect the other end of the fill hose to the water inlet on the barrel.
2. Press the hose end firmly into the water seal until the corrugated section is flush with the water seal. Use soapy water or hand lotion on the hose cuff and seal to reduce friction and improve fit.
3. The hose can be cut at 1' intervals along the ridge at the center of the flat cuffs to shorten if needed. DO NOT CUT THE HOSE ON THE CORRUGATED SECTION!
4. Place the "Do Not Drink Water" WARNING sticker on the barrel above the spigot.

If using an open top barrel with lid make sure the lid is secure and latched. Do not leave the lid off for extended periods of time as the barrel may bow from the weight of the water and make fitting the lid difficult.

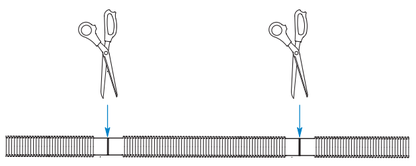

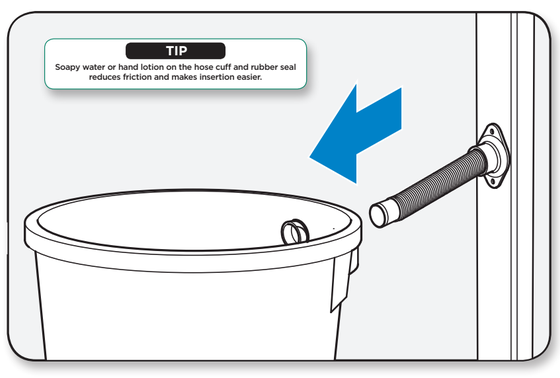

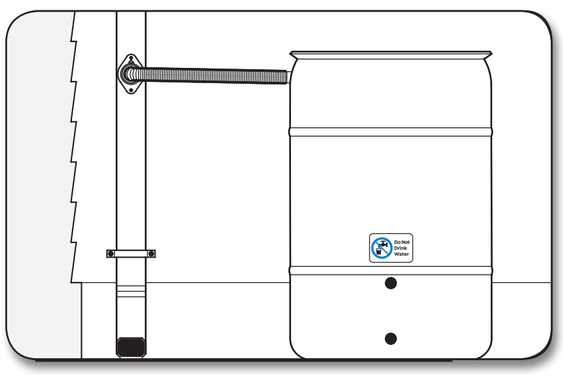

12 Winterizing the barrel

A rain barrel can be damaged if water is allowed to freeze in the barrel.

To Winterize:

1. Disconnect the FlexiFit™ Diverter by removing the (2) screws. Remove the diverter by pulling it out in an upwards motion.
2. Completely drain the barrel making sure the water is being drained away from the foundation of the house.
3. Plug the hole in the downspout with the winter hole cover and secure with the (2) screws.

Barrels can be cleaned using soft scrub and a mild scouring pad. If using a sealed container, a small amount of bleach can be added to the water inside the barrel to remove algae and stains. Drain water and dispose of properly.

WARNING – Tipping Hazard

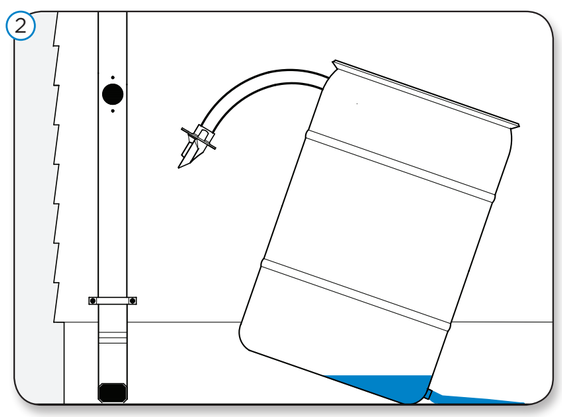

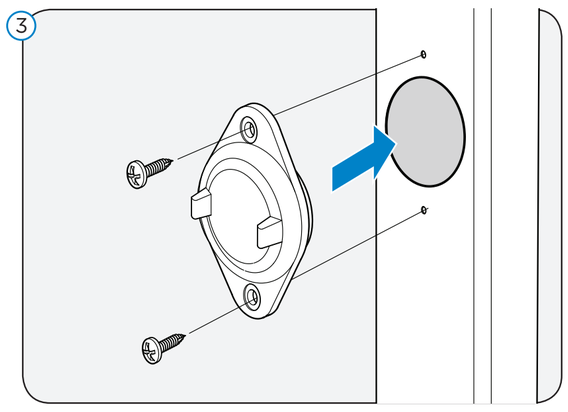

13 Using Your rain barrel

There are several ways to access and distribute the water in the barrel.
Use as much stored water as often as possible to make room for new rainwater.

WARNING – Contamination Hazard
WARNING – Stored rainwater is not suitable for human or animal consumption

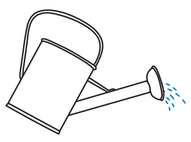

1. A **Watering Can or Bucket** can be filled by using the spigot, or by removing the lid to dunk and fill the bucket or watering can.

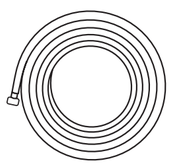

2. A **Garden Hose** can be connected to the spigot or bottom drain for watering remote areas. The barrel must be higher than the area to be watered.
   Elevating the rain barrel will improve water pressure.

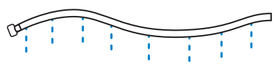

3. A **Soaker Hose** can be connected to the spigot or bottom drain. If connecting to bottom drain, an inline garden hose valve should be fitted in place of the drain cap. This will allow the water to be turned on/off as needed.

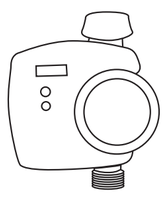

4. A **Garden Hose Timer** can be fitted between bottom drain and soaker hose to automatically dispense water at regular intervals. Be sure the timer is designed for low pressure applications.

   If connecting to a drip irrigation system, use emmiters designed for 4 gallons per hour. ***Always be sure to tighten spigot after use. Even a slow drip will empty the barrel over time.***

14 Linking barrels

There are two ways that barrels can be linked together to increase the water storage capacity:

Option A: Linking barrels rim-to-rim using the fill hose provided. The barrel connected to the downspout will fill first, then overflow into the second barrel.

1. Drill a second water inlet hole in the first barrel at 3" (75mm) below the rim using the (MID SIZE) 1.5" hole saw.
2. Insert the second water fitting provided in the parts kit.
3. Connect the end of the fill hose to link the first and second barrels.

Option B: Linking barrels bottom drain to bottom drain using a modified garden hose. With this method both barrels will fill up at the same level. The second barrel can be placed further away from the first as long as the ground is level between barrels. This is useful for patios, decks or level foundations, where a second barrel can be located away from the downspout.

This method requires that a female garden hose end or male-to-female hose adaptor be purchased (not included).

Attach one end of the garden hose to the bottom drain on the first barrel.

1. The hose can be cut to length and fitted with a female hose end connector.
2. Connect the hose to the drain on the second barrel.
3. Make sure the rims of both barrels are at the same level.

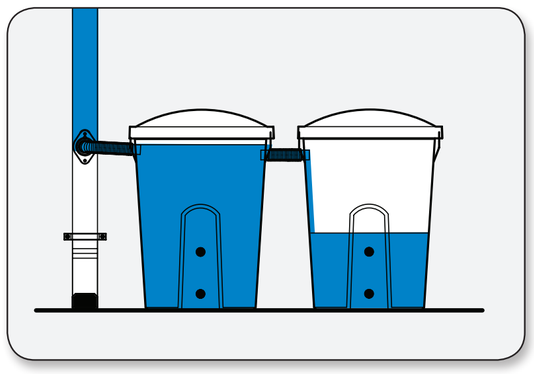

Option A - Rim-to-Rim

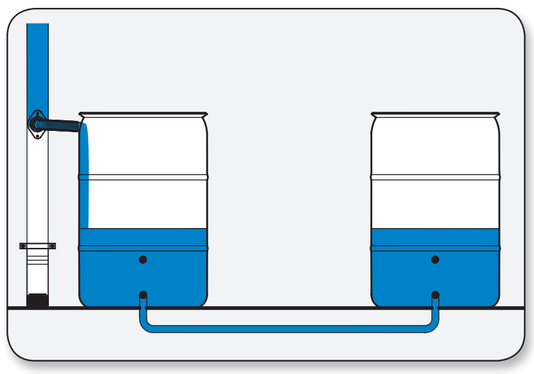

Option B - Bottom Drain to Bottom Drain

15 Troubleshooting

The barrel does not fill with water after rainfall:

1. Check the top of the gutter for blockage at the downspout connection.
2. Remove the FlexiFit™ Diverter and check that the downspout, diverter and fill hose are not blocked by leaves or debris.
3. Make sure the diverter is installed with the collection cup (arrow) facing up.
4. Make sure no point of the fill hose is above the level of the diverter.
5. Check that the diverter is installed at the correct height. It must be above the water inlet on the barrel to fill properly. ***To Correct: drain the barrel and lower the ground until the water inlet on barrel is 1" below the level of the diverter.***
6. Check the spigot and drain to make sure that water is not leaking. Even a slow leak will drain the barrel over time.

The barrel overflows and water leaks out from the lid:

The barrel is too low.

To correct: drain the barrel and construct a solid surface base to raise the barrel to the correct height, according to the instructions.

The diverter collects too much water:

To correct: an optional overflow hose can be added to the rim of the barrel to drain off excess water using the second seal provided in the kit.

The fill hose can be replaced by a 1 - 1/4" bilge hose available at most home centers.

Warnings regarding potential hazards

- Drowning Hazard
- Contamination Hazard
- Electrocution Hazard
- Installation Hazard
- Tilting/Tipping Hazard
- Infestation Hazard
- Wear Safety Glasses
- Wear Safety Gloves

WARNING – Lid must be secured at all times to prevent injury to children.

WARNING – The barrel must be installed on a solid and level base.

WARNING – Stored rainwater not for human or animal consumption